rampline®
NEVER STOP PLAYING

Certified by TÜV according to EN 1176-1:2017

RAMPLINE® SLACKLINE

Description:	The most well-designed slackline system for public spaces. Rigid line attachment with low height and a rugged long-life dynamic webbing.
Activity:	Balance play and balance training. Well suited on beginner level as well as for experts.
Materials:	Ramps of hot dip galvanized and powder coated steel padded with natural rubber and a 35 mm PVC covered polyester webbing.
Mounting:	The unit is delivered ready for mounting on a concrete foundation. Mounting bolts are included. Mounting time approx 1 h, 2 persons.
Dimensions:	Length: 530 cm | Width: 30 cm | Height: 45 cm | Area: 24.5 m^2
Safety area:	150 cm distance from the device. Can share safety area with other equipment.
Multiple units:	Minimum distance between units is 150 cm.
Fall height:	100 cm

For further information, downloads, prices etc, please visit **rampline.com/en/slackline**

Rampline® slackline is **a very popular** device of equipment, that provides the the ultimate stimulus of balance, motor skills and the body supporting muscles.

Age range from **2 years to adult**. A young child will usually like to balance lying on its belly.

The device quickly gives a **sense of progression**, but requires training to fully master.

The **dynamic line** gives a bounce that allows for tricks and movements that are not possible with a static balance line.

Low access height provides **good accessibility** for users with disabilities.

Slackline training **prevents injuries** for athletes within soccer and other fast movement sports.

A robust system that requires **little maintenance**. Can be mounted on most ground covers.

The slackline gathers **young and old users** in physical activity.

SUITABLE GROUND COVERS

- ☑ Wet pour rubber or cork
- ☑ Artificial grass
- ☑ Grass/reinforced grass
- ☑ Sand
- ☑ Wood chips
- ☐ Paving stones
- ☐ Wooden deck

MOUNTING ON DIFFERENT GROUND COVERS

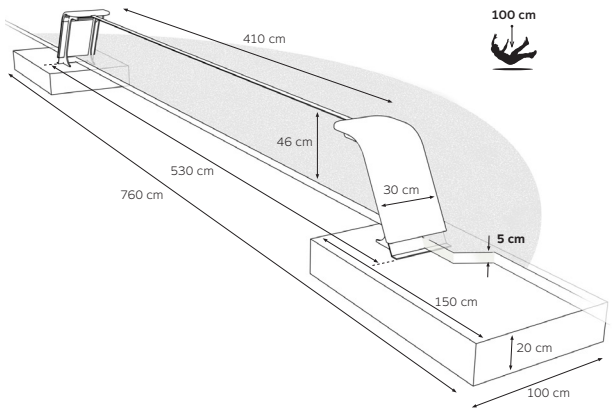

MOUNTING ON WET POUR COVERS OR ARTIFICIAL GRASS

Rampline® Slackline is attached to concrete foundations using expansion bolts (included).

Mounting depth is 6 cm.

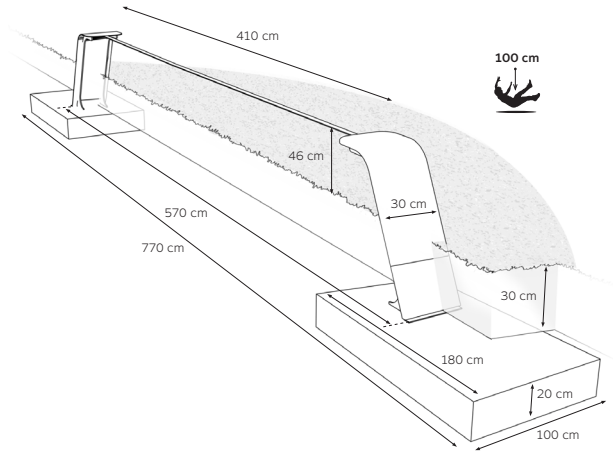

MOUNTING ON GRASS OR LOOSE FILL COVERS
(Wood chips, sand etc.)

An extended version of Rampline® Slackline is used when mounting on grass or loose fill ground covers to allow for a deeper placement of the foundations.

Mounting depth is 30 cm.

See a video for replacing the webbing under *Technical information* on: **rampline.com/en/slackline**

FOUNDATION

Foundation for standard version (wet pour covers or artificial grass):

Two foundations 100 x 150 cm, thickness 20 cm, or one continous foundation 570 x 60 cm, thickness 20 cm

Concrete min. grade B30

Foundation extended version (grass or loose fill covers):

Two foundations 100 x 180 cm, thickness 20 cm, or one continous foundation 592 x 60 cm, thickness 20 cm

Concrete min. grade B30

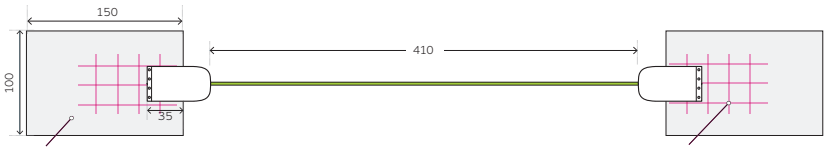

Concrete B30

Reinforcing mesh

SAFETY AREA AND AREA WITH SHOCK ABSORBING GROUND COVER

The safety area extends 150 cm from the device.

A part of the safety area requires a ground cover with shock absorbing properties approved for a 100 cm fall height. This applies to the area under and in 150 cm distance from the webbing itself (gray area in the drawing below).

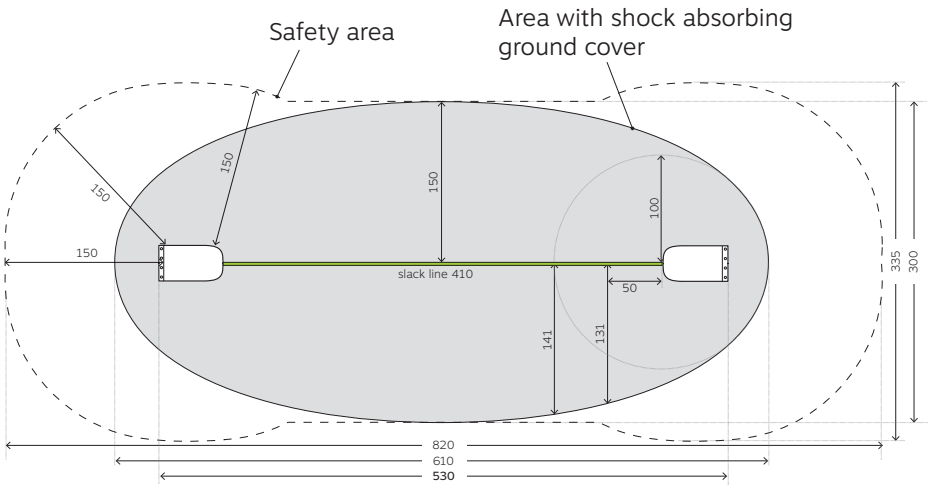

THE BALANCE PARK

The Rampline slackline is suitable as a part of Rampline's balance park concept, where equipment is combined in groups and courses.

The balance park provides more ways in wich the equipment can be used, and effectively triggers play and physical activity.

See balance park samples at **rampline.com/balanceparks**

Rampline can assist you in developing an exciting activity area customized for the user group in mind.

Get in touch with us on **contact@rampline.no**

SUSTAINABILITY AND THE ENVIRONMENT

Rampline's products are designed for long term use with easy access for replacing individual parts.

The materials in use are mainly sustainably manufactured natural rubber, non-toxic recycled rubber as well as steel manufactured with zero-carbon energy.

Read more at **rampline.com/responsibility**